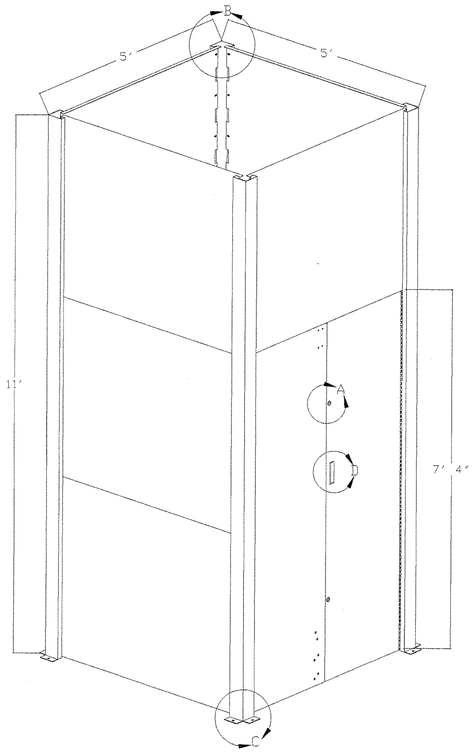

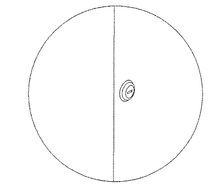

DETAIL A
SCALE 1 : 4

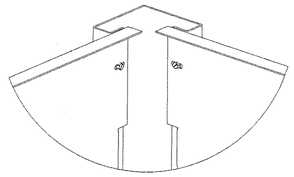

DETAIL B
SCALE 1 : 4

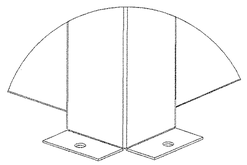

DETAIL C
SCALE 1 : 4

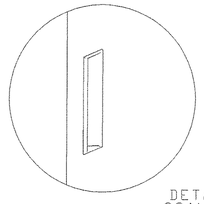

DETAIL D
SCALE 1 : 4

1) Enclosure pad should be 7' x 7' x 8" thick 2500 psi reinforced concrete.
2) Concrete reinforcement is #4 rebar on 13" centers.
3) Stanchions constructed of 12 GA (.104) electro galvanized steel alloy.
4) Doors and Panels constructed of 16 GA (.059) electro galvanized steel alloy.
5) Constructed of (4) hour fire resistant materials.
6) Coated with durable weather resistant powder coated primer ready for final finish.
7) Protective bollards as required by local agencies
8) Full length piano style hinge secures door panels to stantions
9) Chain drawn, spring loaded top slide bolt and bottom manual slide bolt mounted inside of left door panel.
10) Dual surface mounted cam locks provide security on right door panel.

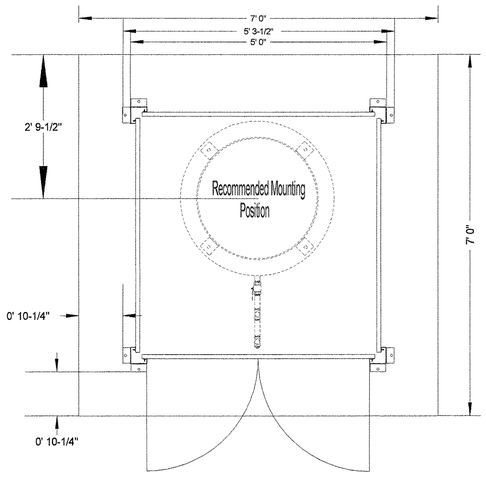

Plan View

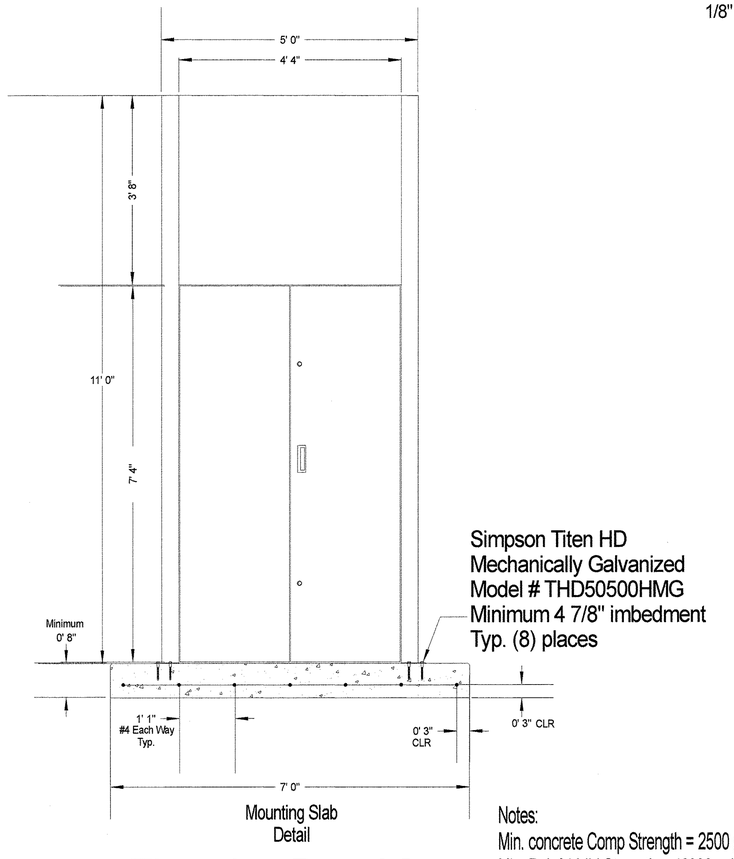

Elevation Door View

Notes:
Min. concrete Comp Strength = 2500 psi
Min. Reinf. Yeild Strength = 40000 psi

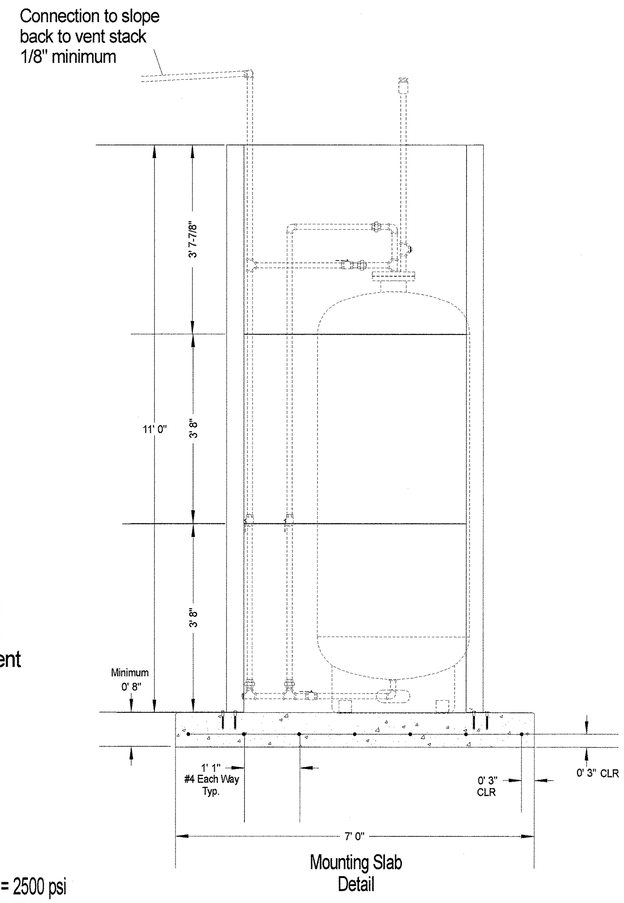

Elevation Side View

PROPRIETARY AND CONFIDENTIAL
THE INFORMATION CONTAINED IN THIS DRAWING IS THE SOLE PROPERTY OF JEM IND. INC. ANY REPRODUCTION IN PART OR AS A WHOLE WITHOUT THE WRITTEN PERMISSION OF JEM IS PROHIBITED.

JEM Industries, Inc.
1131 E. Main St., Ste. 200, Tustin, CA 92780
Tel: (714) 838-4100 Fax: (714) 838-4120

NO.	DATE	REVISIONS	BY	APPR.

Part Number
FC-4710

CONSULTANT

STAMP
REGISTERED PROFESSIONAL ENGINEER
DAVID E. PEYTON
No. 3288
Exp. 3-31-09
STRUCTURAL
STATE OF CALIFORNIA
1/17/08

DRAWING TITLE
Vapor Tank Enclosure

PROJECT NO.	4710
DRAWING NO.	0016-4710
SCALE	
DRAWN BY	MAS
DESIGNED BY	
CHECKED BY	
APPROVED BY	
DATE STARTED	12/12/07
DATE SUBMITTED	
SHEET NO.	

EP-1

SHEET 1 OF 1